BS2sx-IC MODULE Rev. D

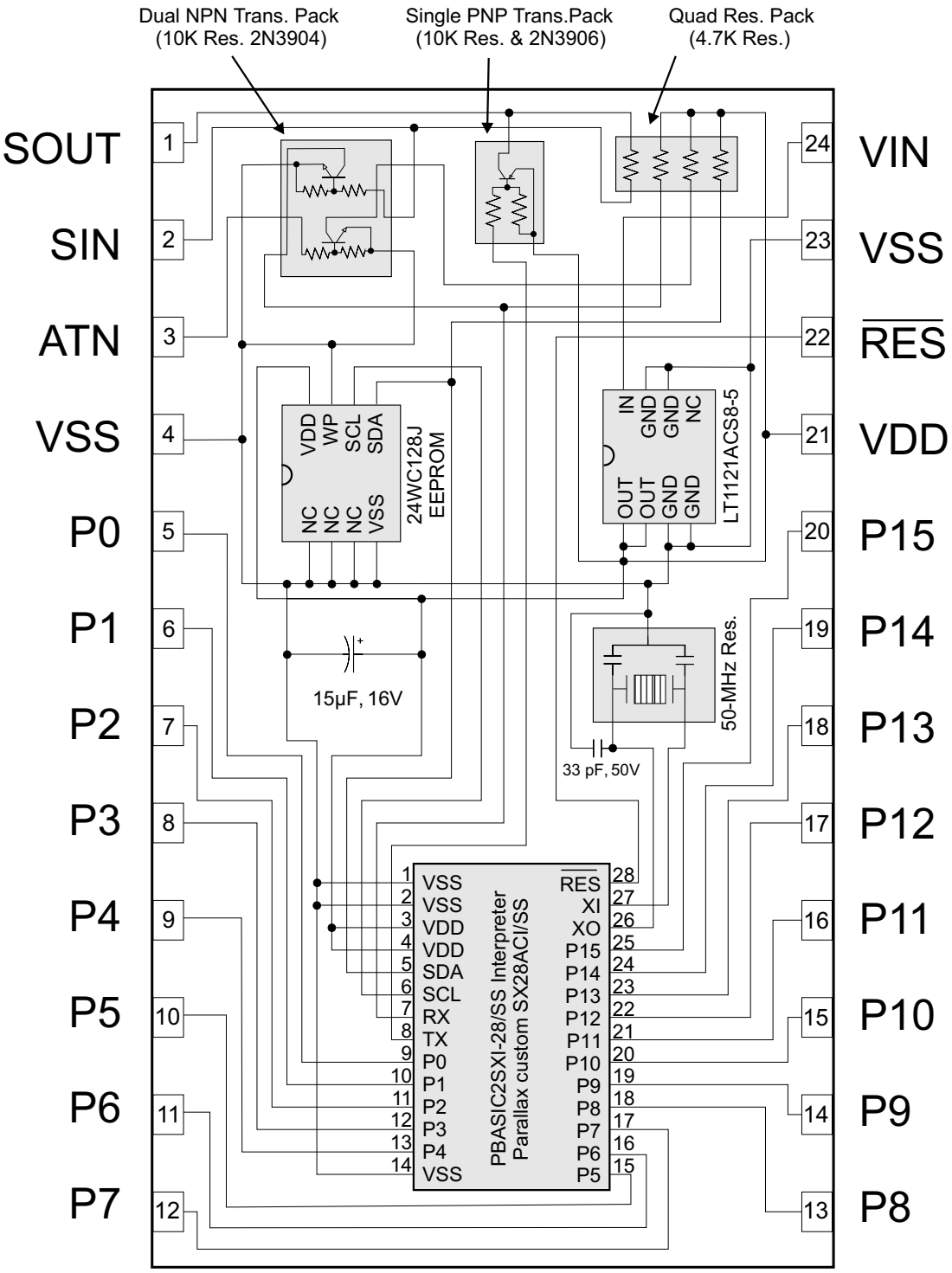

Connect DSR and RTS for automatic port detection.

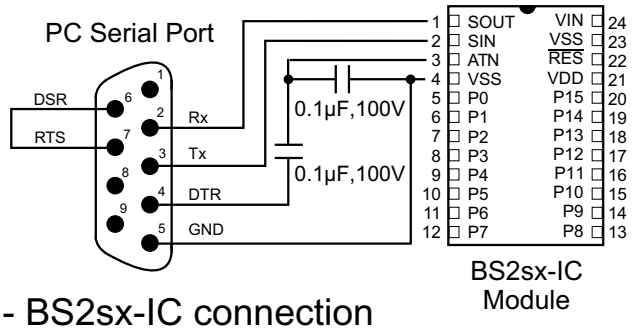

PC - to - BS2sx-IC connection